MAX BLANK
HIGH QUALITY

# Stoves

## Chur E

| crème white | hewed crème white | black rustic slate |
|---|---|---|



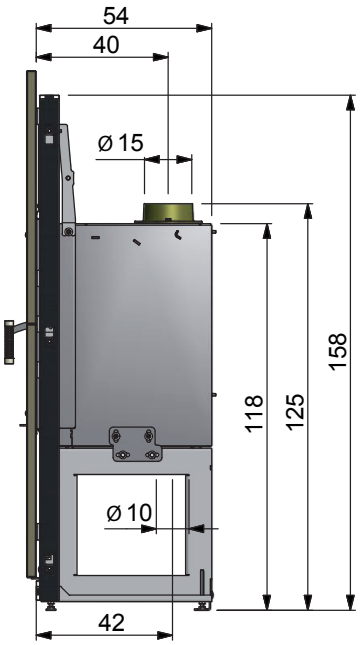


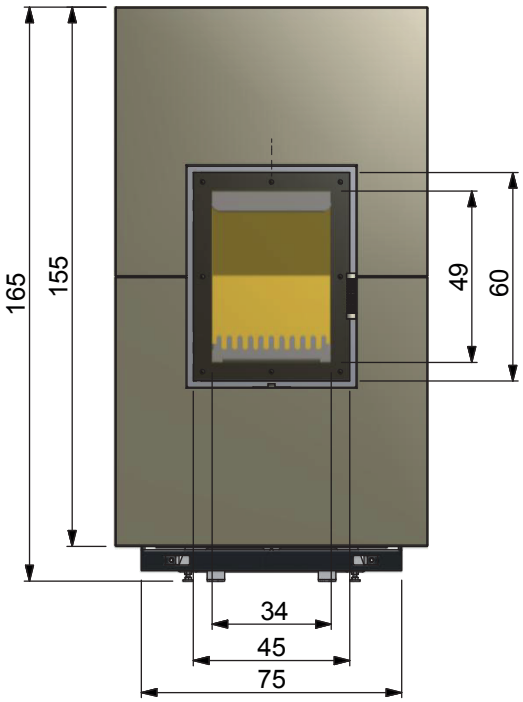


Top accumulation block

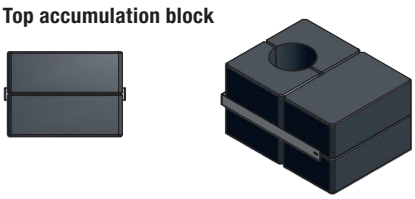

Left and right accumulation block

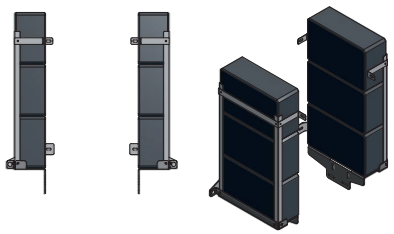

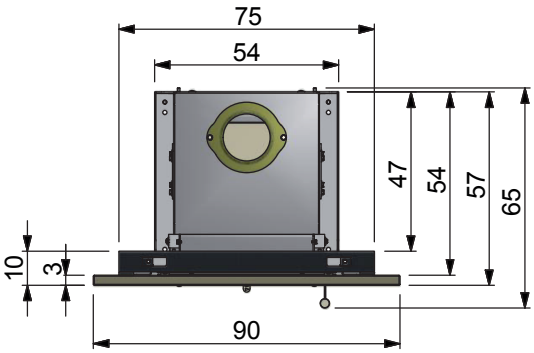


All dimensions rounded in cm.

## Chur E

| Article No. | Product | Delivery time in weeks |
|---|---|---|
| | Chur E | |
| 527-2001 | - Crème-white natural stone | 6 |
| 527-2101 | - Hewed crème-white natural stone | 6 |
| 527-2301 | - Black rustic slate | 6 |

- KE 1 combustion chamber with screen print on glass
- Natural stone façade
- Smoke outlet on top
- Door hinge on the left hand side (hinge on the right hand side available on order with a surcharge)

## Accessories for the Chur E

| Article No. | Product |
|---|---|
| | Air inlet connection set (included) |
| | Please remember to specify the air inlet version when placing your order: Vertical or horizontal air inlet |
| | System cassette for pellets |
| | • made of high temperature resistant stainless steel |
| | • with 3 special black Ceran glasses |
| | • included in the set: lighter, silicone gloves, cleaning brush, 20kg pellets felt bag |
| 551-2004 | Cassette for pellets KO1 8,7 KW |
| | ordered together with the stove |
| 551-2004 | ordered separately |
| | In order to accumulate advantages additional options are available: |
| 303235-916 | Top accumulation block consisting of 9 accumulation stones of 150kg total weight |
| 303236-916 | Left and right accumulation block consisting of 6 accumulation stones of 160kg total weight |
| 40543-001 | Convection jacket |

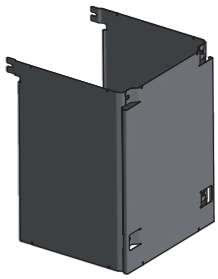

**Convection jacket**

## Technical details for the Chur E

| | H x W x D |
|---|---|
| Outer dimension | 165 x 90 x 65 cm |
| Installation dimension | 158 x 75 x 54 cm |
| Combustion chamber | 31 x 34 x 35 cm |

| | H x W |
|---|---|
| Window | 49 x 34 cm |
| Door | 60 x 45 cm |
| Top flue pipe connection | Ø 15 cm |
| Outside air connection | Ø 10 cm |
| Height to mid air connection | 125 cm |
| Weight total | 281 kg |
| Weight chamotte | 60 kg |

| | Pellet box | Wood/ wood briquettes* |
|---|---|---|
| Nominal heat output | 8,7 kW | 7,5 kW |
| Room heat output | 8,7 kW | 7,5 kW |
| Rated output range | - | 7,8 - 4,3 kW |
| Max. combustion quantity | 7,5 kg | 2,2 kg/h |
| Efficiency | 82,9% | 83 % |
| CO (13 % O2) | 0,09% | 0,065 % |
| CO (13 % O2) | 1072,7 mg/m³ | 806,4 mg/m³ |
| Dust (13%O2) | 21,7 mg/m³ | 31,6 mg/m³ |
| NOx (13 % O2) | 72,7 mg/m³ | 115,6 mg/m³ |
| CxHy (13 % O2) | 63,9 mg/m³ | 26,5 mg/m³ |
| **Data for chimney calculation according to EN 13384** | | |
| Flue gas mass flow | 9,71 g/s | 6,8 g/s |
| Flue gas temperature on pipe socket | 280 °C | 280°C |
| Minimum draught | 12 Pa | 12 Pa |

All the above details are test bench values.
*) Only wood briquettes according to standard EN 14961-3 (A1), quality class A1, are approved.
Subject to technical changes.

Fulfills the latest standards in operating log wood briquettes and pellet (See page 55).